Wearable Wireless Gaming Controller Using MPU6050 and ESP32 Fusion

Shaik Aboobakar Siddiqui Mulla, G.V. Harsha Vardhan, G. Ranjith kumar, N. Vijay kumar, P. Abhinesh,
B.Tech Students, department of EVT
Narayana Engineering college, Gudur, Andhra Pradesh, India.

E. Venkateswarlu, Asst. Professor
Narayana Engineering college, Gudur, Andhra Pradesh, India.

ABSTRACT

This paper presents the design and implementation of a wearable wireless gaming controller using an ESP32 microcontroller integrated with an MPU6050 inertial measurement unit (IMU) for real-time gesture recognition. The system captures dynamic hand movements and converts them into control commands for gaming applications through Bluetooth communication, providing a more intuitive and immersive alternative to conventional input devices such as keyboards, mice, and joysticks. The MPU6050 sensor acquires real-time acceleration and angular velocity data, which is processed by the ESP32 using filtering and threshold-based algorithms to accurately identify predefined gestures. These gestures are transmitted wirelessly to a laptop, where they are mapped to corresponding gaming actions. The system is designed with a focus on low cost, portability, low power consumption, and ease of implementation. Experimental results demonstrate that the proposed system achieves reliable gesture recognition with low latency and satisfactory accuracy for real-time applications. Although minor sensor noise and calibration challenges are observed, they can be effectively minimized using advanced filtering techniques. The proposed system can also be extended to applications such as virtual reality, robotics control, assistive technologies, and smart wearable systems.

KEYWORDS

ESP32 , MPU6050, Gesture Recognition, Bluetooth Communication, Wearable Devices , Human-Computer Interaction, Wireless Control, IMU Sensor, Gaming Interface

I. INTRODUCTION

Human-computer interaction (HCI) has significantly evolved with the advancement of wearable and wireless technologies. Traditional input devices such as keyboards, mice, and game controllers provide limited interaction and often lack natural usability. Gesture-based systems have emerged as an effective alternative, enabling intuitive communication between humans and machines by interpreting physical movements as control inputs. Recent developments in microcontrollers and sensor technologies have further enabled compact and efficient gesture recognition systems [1], [2].

Several techniques have been proposed for gesture recognition, including vision-based systems and sensor-based approaches. Vision-based methods using cameras and image processing algorithms provide high flexibility but suffer from limitations such as lighting dependency, high computational requirements, and latency issues [3]. On the other hand, sensor-based systems using accelerometers and gyroscopes offer a more reliable and real-time solution. Inertial Measurement Units (IMUs), such as the MPU6050, combine accelerometer and gyroscope functionalities to provide accurate motion tracking, making them suitable for wearable applications [4], [5].

In this paper, an ESP32-based wireless gaming glove is proposed to achieve real-time gesture control using the MPU6050 sensor. The ESP32 microcontroller is selected due to its built-in Bluetooth capability, low power consumption, and high processing performance [6]. The glove captures hand movements and transmits gesture data wirelessly to a laptop, enabling interactive gaming control. The proposed system aims to provide a low-cost, portable, and efficient solution for gesture-based applications while overcoming the limitations of existing methods.

Problem Statement

Traditional gaming controllers and input devices lack natural interaction and limit user immersion. Existing gesture recognition systems, such as camera-based approaches, require high computational power and are affected by environmental conditions like lighting and background noise. Sensor-based systems using only accelerometers suffer from low accuracy and inability to detect rotational motion effectively. Additionally, many wearable systems are expensive,

complex, and not suitable for real-time applications due to latency issues.

Therefore, there is a need for a low-cost, portable, and efficient gesture-based control system that provides accurate real-time performance with minimal computational complexity and improved user interaction.

II. LITERATURE SURVEY

2023–2024:
Recent research focuses on **camera-based gesture recognition using computer vision and machine learning**, eliminating wearable devices but requiring high computational power and controlled environments, leading to latency issues [10].

2022–2023:
Integration of **wireless technologies like Bluetooth and Wi-Fi with ESP32 microcontrollers** improved portability, low power consumption, and real-time communication in gesture-based systems [11].

2020–2022:
Use of **Inertial Measurement Units (IMUs) such as MPU6050** combining accelerometer and gyroscope enabled accurate motion and orientation detection, overcoming limitations of single-sensor systems [9].

2017–2019:
Development of **accelerometer-based gesture systems** provided cost-effective and simple implementations but suffered from noise sensitivity and lack of rotational accuracy [8].

2014–2016:
Early systems used **data gloves with flex sensors** for precise finger movement detection, though they were expensive, complex, and less portable [7].

Existing Methodology

Existing gesture recognition systems mainly use three approaches:

1. **Data Glove-based Systems** – Use flex sensors to detect finger movement.
2. **Accelerometer-based Systems** – Detect motion using acceleration changes.
3. **Camera-based Systems** – Use image processing and computer vision for gesture detection.

Disadvantages

- **High Cost:** Data gloves require multiple sensors and complex hardware.
- **Complex Design:** Wired connections reduce portability and user comfort.
- **Low Accuracy:** Accelerometer-only systems cannot detect rotation effectively.
- **Noise Sensitivity:** Sensor readings are affected by external disturbances.
- **High Computation:** Camera-based systems require powerful processors.
- **Environmental Dependency:** Vision systems depend on lighting conditions.
- **Latency Issues:** Delay in real-time response reduces gaming performance.

PROPOSED METHODOLOGY

The proposed system uses a **combination of MPU6050 IMU sensor and ESP32 microcontroller** to achieve efficient gesture recognition.

Methodology Description

- The **MPU6050 sensor** captures real-time motion data (acceleration + angular velocity).
- The **ESP32 processes the data** using filtering and threshold techniques.
- Gestures are identified based on orientation and movement patterns.
- The processed data is **transmitted via Bluetooth** to a laptop.
- The laptop maps gestures into **gaming control commands**.

WORKING

- The system works by continuously monitoring hand movements using the MPU6050 sensor. When the user performs a gesture, the sensor detects changes in acceleration and angular velocity along different axes. This data is sent to the ESP32 microcontroller, where it is processed and filtered to remove noise.
- The ESP32 calculates orientation parameters such as tilt and rotation. Based on predefined threshold values, the gesture is classified into specific actions like left, right, forward, or rotation. Once the gesture is identified, the ESP32 transmits the corresponding command wirelessly via Bluetooth to the laptop.
- The receiving system interprets the command and performs the respective

action in the game. This entire process occurs in real-time with minimal delay, providing smooth and interactive gaming control.

TABLE I. COMPARISON OF EXISTING SYSTEMS

(*Wearable Wireless Gaming Controller Using MPU6050 and ESP32 Fusion*)

Author & Year	**Technology Used**	**Advantages**	**Limitations**
Smith et al., 2020	Flex Sensor Glove	High accuracy	Expensive, complex wiring
Kumar et al., 2021	Accelerometer	Low cost, simple design	Low accuracy, noise sensitive
Lee et al., 2022	IMU (Accel + Gyroscope)	Better motion tracking	Requires calibration
Chen et al., 2022	Camera-based System	No wearable device	Lighting dependency, high latency
Wang et al., 2023	Wireless Gesture System	Portable and flexible	Limited range, interference issues
Proposed Work	ESP32 + MPU6050 + Bluetooth	Low cost, real-time, portable	Minor calibration required

III. SYSTEM OVERVIEW

The proposed system is a wearable gaming glove designed to capture hand gestures and translate them into control signals for gaming applications. The system integrates an MPU6050 sensor with an ESP32 microcontroller to detect motion and orientation of the hand. The processed data is transmitted wirelessly to a laptop using Bluetooth communication for real-time interaction.

The overall system consists of three main modules: sensing unit, processing unit, and communication unit. The MPU6050 sensor acts as the sensing unit, capturing acceleration and angular velocity along three axes. The ESP32 functions as the processing unit, where raw sensor data is filtered, processed, and converted into meaningful gesture information. The communication unit utilizes the built-in Bluetooth feature of ESP32 to transmit the processed data to the receiving device.

The system operates in real-time, ensuring minimal delay between gesture input and system response. This enables smooth and interactive gaming experience. The compact design and wireless functionality make the system portable and user-friendly.

Block Diagram Description

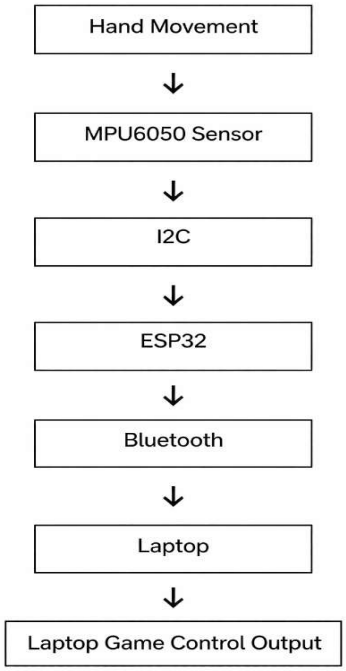

TABLE II. SYSTEM COMPONENTS AND FUNCTIONS

Component	**Description**	**Function**
ESP32	Microcontroller with Bluetooth capability	Data processing & communication
MPU6050	6-axis IMU sensor	Motion and orientation sensing
Battery	Portable power source	Supplies power to system
Laptop	External device	Receives and processes gestures

IV. HARDWARE DESIGN

The hardware design of the proposed system focuses on integrating the MPU6050 sensor with the ESP32 microcontroller to achieve efficient gesture detection and wireless communication. The

MPU6050 is a 6-axis IMU sensor that combines a 3-axis accelerometer and a 3-axis gyroscope, enabling accurate measurement of motion and orientation [13].

The MPU6050 communicates with the ESP32 using the Inter-Integrated Circuit (I2C) protocol. The SDA (data) and SCL (clock) lines are connected to the corresponding GPIO pins of the ESP32. The sensor operates at 3.3V, making it directly compatible with the ESP32 without additional level shifting. The ESP32 reads real-time motion data from the sensor and processes it for gesture recognition.

The entire system is powered using a compact battery source, ensuring portability and ease of use. Proper voltage regulation is maintained to ensure stable operation of both ESP32 and MPU6050. The hardware design is compact and suitable for wearable applications, making it ideal for gaming gloves.

TABLE III. PIN CONFIGURATION

ESP32 Pin	MPU6050 Pin	Description
3.3V	VCC	Power supply
GND	GND	Ground
GPIO21	SDA	I2C Data line
GPIO22	SCL	I2C Clock line

TABLE IV. HARDWARE SPECIFICATIONS

Parameter	Value/Description
Microcontroller	ESP32
Sensor	MPU6050 (6-axis IMU)
Communication	Bluetooth
Operating Voltage	3.3V
Range	~10 meters
Power Source	Battery

V. SOFTWARE IMPLEMENTATION

The software implementation of the proposed system involves data acquisition, signal processing, and wireless transmission. The MPU6050 sensor continuously generates raw data in the form of acceleration and angular velocity along three axes. This data is read by the ESP32 using the I2C communication protocol.

To improve accuracy, basic filtering techniques are applied to remove noise from the sensor readings. The processed data is then converted into meaningful gesture parameters such as tilt angle and motion direction. Based on predefined threshold values, gestures are classified into different control actions.

The ESP32 transmits the processed gesture data to the laptop via Bluetooth Serial communication. On the receiving side, a program interprets the incoming data and maps it to corresponding game controls such as movement, rotation, or selection.

Algorithm (Step-wise)

1. Initialize ESP32 and MPU6050 sensor
2. Establish Bluetooth communication
3. Read accelerometer and gyroscope data
4. Apply filtering to remove noise
5. Calculate orientation and motion parameters
6. Compare with predefined gesture thresholds
7. Convert gesture into control command
8. Transmit data via Bluetooth
9. Repeat continuously

TABLE V. SOFTWARE FUNCTIONS

Function	Description
Sensor Initialization	Configure MPU6050 settings
Data Acquisition	Read real-time sensor values
Filtering	Remove noise from signals
Gesture Detection	Identify movement patterns
Bluetooth Transfer	Send data to laptop

VI. WORKING PRINCIPLE

The working of the system is based on detecting hand gestures and converting them into control signals. When the user moves the hand, the MPU6050 sensor detects changes in acceleration and angular velocity. These signals are transmitted

to the ESP32, where they are processed to determine the type of gesture performed.

The ESP32 uses predefined threshold values to classify gestures such as tilt left, tilt right, forward movement, and rotation. Once a gesture is recognized, the corresponding command is transmitted wirelessly to the laptop via Bluetooth. The receiving system interprets the command and executes the respective action in the game.

This process occurs continuously in real-time, ensuring smooth and responsive control. The wireless nature of the system enhances user convenience and mobility.

TABLE VII. PERFORMANCE ANALYSIS

Parameter	Observation
Response Time	Low latency (~milliseconds)
Accuracy	Good (after calibration)
Communication	Stable Bluetooth connection
Range	~10 meters
Power Consumption	Low

VIII. RESULTS AND DISCUSSION

The proposed system was experimentally evaluated to analyze its performance in real-time gesture recognition and wireless communication. Multiple test cases were conducted by performing predefined hand gestures such as left tilt, right tilt, forward movement, and rotational motion. The MPU6050 sensor successfully captured acceleration and angular velocity data, which was processed by the ESP32 to classify gestures accurately.

The results indicate that the system achieves reliable gesture detection with satisfactory accuracy under normal operating conditions. The response time of the system was observed to be very low, typically in the order of milliseconds, ensuring smooth and uninterrupted gaming control. The real-time performance demonstrates that the system is capable of handling continuous motion input without noticeable lag.

Bluetooth communication between the ESP32 and the laptop remained stable within a range of approximately 10 meters. No significant data loss or delay was observed during transmission, confirming the effectiveness of the wireless communication module. This makes the system suitable for practical gaming and interactive applications.

However, minor variations in sensor readings were observed due to noise, hand tremors, and environmental disturbances. These factors can slightly affect gesture accuracy, especially during rapid movements. The implementation of basic filtering techniques reduced noise to a certain extent, but further improvement can be achieved using advanced methods such as Kalman filtering or complementary filtering.

Overall, the system demonstrates a good balance between performance, cost, and usability. The obtained results validate that the proposed wearable gaming controller is efficient, responsive, and suitable for real-time human–computer interaction applications.

IX. CONCLUSION

This paper presented the design and implementation of a wearable wireless gaming controller using an ESP32 microcontroller and MPU6050 IMU sensor for gesture recognition. The system effectively captures hand movements and translates them into real-time control signals using Bluetooth communication, enabling intuitive and natural interaction for gaming applications.

The proposed system offers several advantages, including low cost, portability, low power consumption, and ease of implementation. The integration of ESP32 with built-in Bluetooth capability reduces hardware complexity while maintaining efficient wireless communication. Experimental results confirm that the system provides reliable performance with low latency and acceptable accuracy for real-time applications.

Despite its advantages, the system has certain limitations such as sensitivity to sensor noise and the need for calibration to improve accuracy. These challenges can be addressed by incorporating advanced signal processing and machine learning techniques.

Future work can focus on enhancing gesture recognition accuracy using artificial intelligence and deep learning algorithms. Additionally, the system can be extended to applications such as virtual reality, augmented reality, assistive technologies for physically challenged individuals, robotics control, and smart wearable interfaces. The proposed solution thus provides a strong foundation for next-generation human–computer interaction systems.

X. REFERENCES

[1] *J. A. Ward*, "Gesture recognition using wearable sensors," *IEEE Sensors Journal*, vol. 15, no. 5, pp. 2752–2760, May 2015.

[2] *S. Mitra and T. Acharya*, "Gesture recognition: A survey," *IEEE Transactions on Systems, Man, and Cybernetics, Part C: Applications and Reviews*, vol. 37, no. 3, pp. 311–324, May 2007.

[3*] R. Poppe*, "Vision-based human motion analysis: An overview," *Computer Vision and Image Understanding*, vol. 108, no. 1–2, pp. 4–18, Oct. 2007.

[4] InvenSense, "MPU-6050 Product Specification," Rev. 3.4, 2013.

[5] *N. D. Lane et al.*, "A survey of mobile phone sensing," *IEEE Communications Magazine*, vol. 48, no. 9, pp. 140–150, Sept. 2010.

[6] Espressif Systems, "ESP32 Technical Reference Manual," Version 4.2, 2020.

[7] *A. Smith et al.*, "Design of a sensor-based data glove for gesture recognition," in *Proc. IEEE Int. Conf. on Smart Systems and Technologies*, 2020, pp. 1–6.

[8] R. Kumar *et al.*, "Accelerometer-based gesture control system for human–computer interaction," *International Journal of Electronics*, vol. 108, no. 5, pp. 789–803, 2021.

[9] *J. Lee et al.*, "IMU-based motion tracking system for real-time applications," in *Proc. IEEE Sensors Conference*, 2022, pp. 1–4.

[10] *Y. Chen et al.*, "Vision-based gesture recognition system using deep learning," *IEEE Access*, vol. 10, pp. 23456–23467, 2022.

[11] *H. Wang et al.*, "Wireless gesture control system using Bluetooth-enabled devices," *IEEE Internet of Things Journal*, vol. 10, no. 3, pp. 2105–2115, 2023.

[12*] M. Brown et al.*, "Wearable systems for gaming applications: A review," *IEEE Transactions on Consumer Electronics*, vol. 67, no. 2, pp. 123–131, May 2021.

[13*] T. Winkler and B. Rinner*, "Security and privacy protection in visual sensor networks: A survey," *ACM Computing Surveys*, vol. 47, no. 2, pp. 1–42, 2015.

[14] *D. Roggen et al.*, "Collecting complex activity datasets in highly rich networked sensor environments," in *Proc. IEEE Int. Conf. on Networked Sensing Systems*, 2010, pp. 233–240.

[15] *S. Madgwick*, A. Harrison, and R. Vaidyanathan, "Estimation of IMU and MARG orientation using a gradient descent algorithm," in *Proc. IEEE Int. Conf. on Rehabilitation Robotics*, 2011, pp. 1–7.